PROJECT 01: Design and Analysis of Common Source and Common Drain Amplifiers by using Cadence Virtuoso

A Comprehensive Study of Analog Circuits

By: Priya Chaudhary, Bhavya Solanki,

Astitva Johri and Aditya Kumar

Chapters:

List of Figures.....3

1. Introduction 4
   1.1 Common Source Amplifier… 4
   1.2 Common Drain Amplifier… 4
2. Brief Description 5
   2.1 Common Source Amplifier… 5
   2.2 Common Drain Amplifier… 5
3. Circuit Design.....6-7
   3.1 Common Source Amplifier Circuit.....6
   3.2 Common Drain Amplifier Circuit.....7
4. Simulation Results… 8
5. Advantages and Disadvantages..... 9
   5.1 Advantages… 9
   5.2 Disadvantages… 9
6. Conclusion… 10
7. Frequently Asked Questions (FAQs)..... 11

LIST OF FIGURES

Figure 3.1 Circuit of Common Source Amplifier 6
Figure 3.2 Circuit of Common Drain Amplifier 7
Figure 4.1 Simulation Results of Common Source Amplifier 8
Figure 4.2 Simulation Results of Common Drain Amplifier 8

1. INTRODUCTION

Common Source (CS) Amplifier and Common Drain (CD) Amplifier are two important configurations in MOSFET amplifier design.

1.1 Common Source Amplifier:

The Common Source (CS) amplifier is a fundamental building block in analog circuit design that is primarily used for voltage amplification. This amplifier configuration employs a Metal-Oxide-Semiconductor Field-Effect Transistor (MOSFET) with its source terminal serving as a common node for both the input and output signals. The input signal is applied to the gate, and the amplified output signal is taken from the drain. This setup provides significant voltage gain due to the inherent properties of the MOSFET operating in the saturation region.

1.2 Common Drain Amplifier:

The Common Drain (CD) amplifier, often referred to as a source follower, is another essential configuration in analog circuit design. Unlike the CS amplifier, the CD amplifier is characterized by its ability to provide a voltage gain close to unity, making it unsuitable for high voltage amplification but highly effective as a buffer. In this configuration, the drain terminal of the MOSFET is common to both the input and output signals, with the input applied to the gate and the output taken from the source terminal.

2. BRIEF DESCRIPTION

2.1 Common Source Amplifier:

The CS amplifier is designed to amplify the input signal with significant voltage gain. In this configuration, the source terminal is common to both the input and output signals, while the input is applied to the gate, and the output is taken from the drain.

Key Parameters:

1. Voltage Gain (Av): Where gm is the transconductance and RD is the load resistance.
2. Input Impedance (Z{in}): High, determined by the gate impedance.
3. Output Impedance (Z{out}): Moderate, determined by the drain resistance and device parameters.

Applications:

- Voltage amplification
- Signal processing

2.2 Common Drain Amplifier (Source Follower):

The CD amplifier is primarily used for impedance matching and buffering. In this configuration, the drain is common to both the input and output signals, while the input is applied to the gate, and the output is taken from the source.

Key Parameters:

1. Voltage Gain (Av): For large gm RS, Av \ approx 1.
2. Input Impedance (Z{in}): High.
3. Output Impedance (Z{out}): Low, facilitating effective impedance matching.

Applications:

- Impedance matching
- Signal buffering

3. CIRCUIT DESIGN

3.1 Common Source Amplifier Circuit:

1. Components Required:
    - MOSFET (e.g., 2N7000)
    - Resistors (RG, RD, and RS)
    - Power supply (V{DD}).
2. Design Steps:
    - Choose RD to set the desired voltage gain.
    - Bias the MOSFET for proper operation in the saturation region.

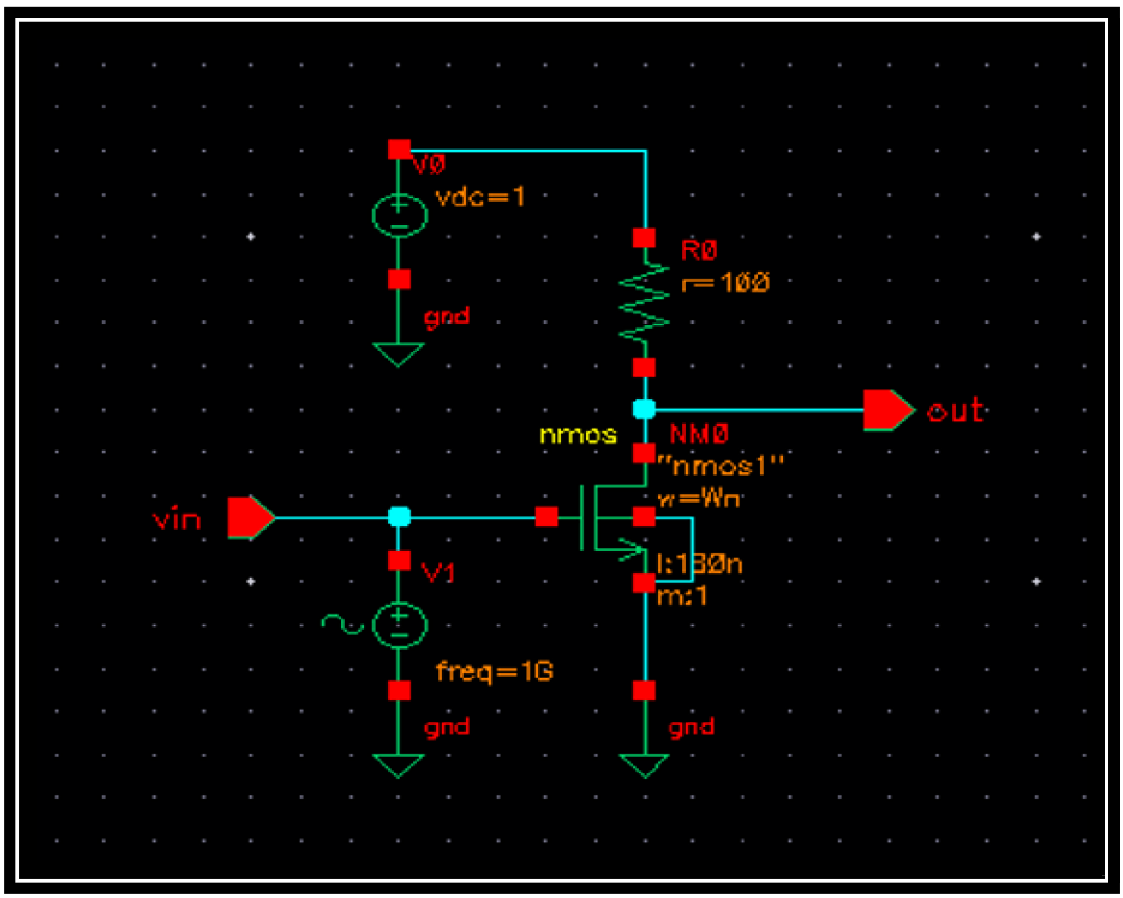

Figure 3.1 Circuit of Common Source Amplifier

3.2 Common Drain Amplifier Circuit:

1. <u>Components Required:</u>
   - MOSFET (e.g., IRF540)
   - Resistors (RG and RS)
2. <u>Design Steps:</u>
   - Set RS to control the output impedance.
   - Bias the MOSFET to operate in the saturation region.

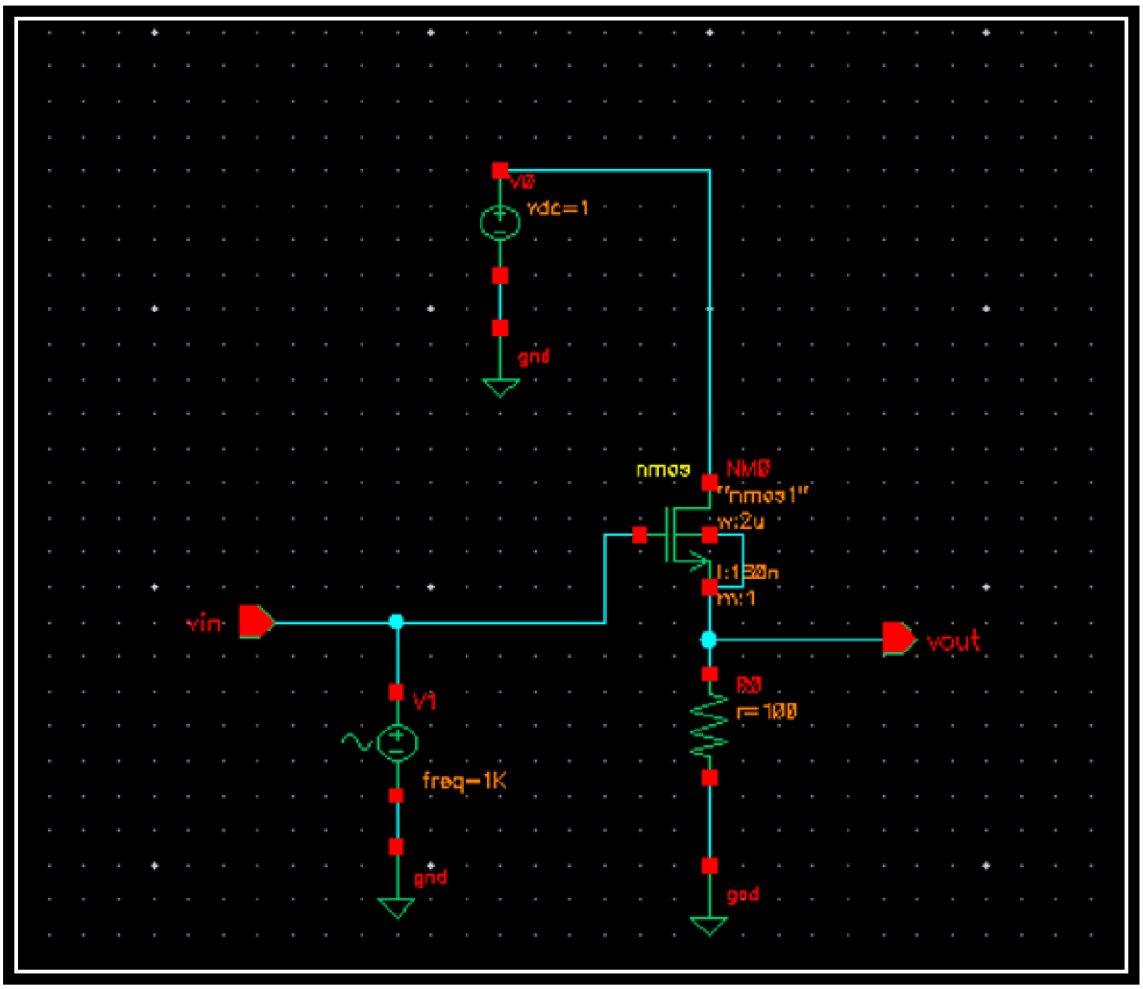

<u>Figure 3.2</u> Circuit of Common Drain Amplifier

4. SIMULATION RESULTS

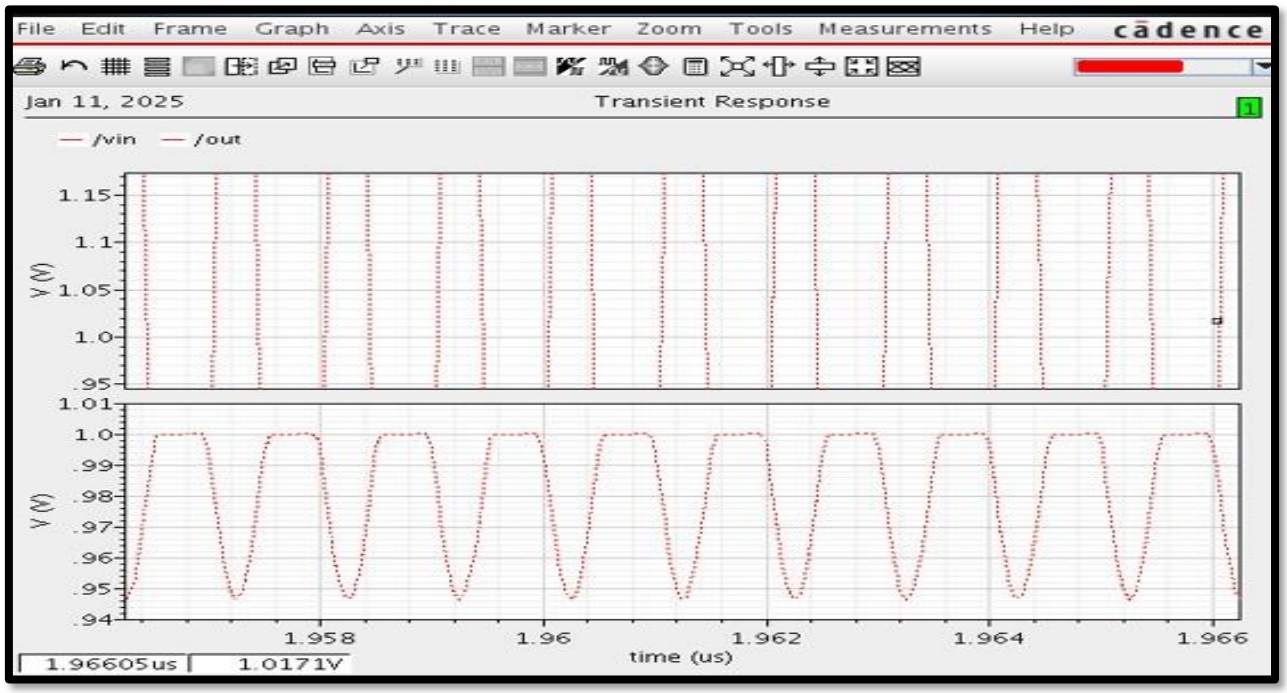

Figure 4.1 Simulation results of Common Source Amplifier

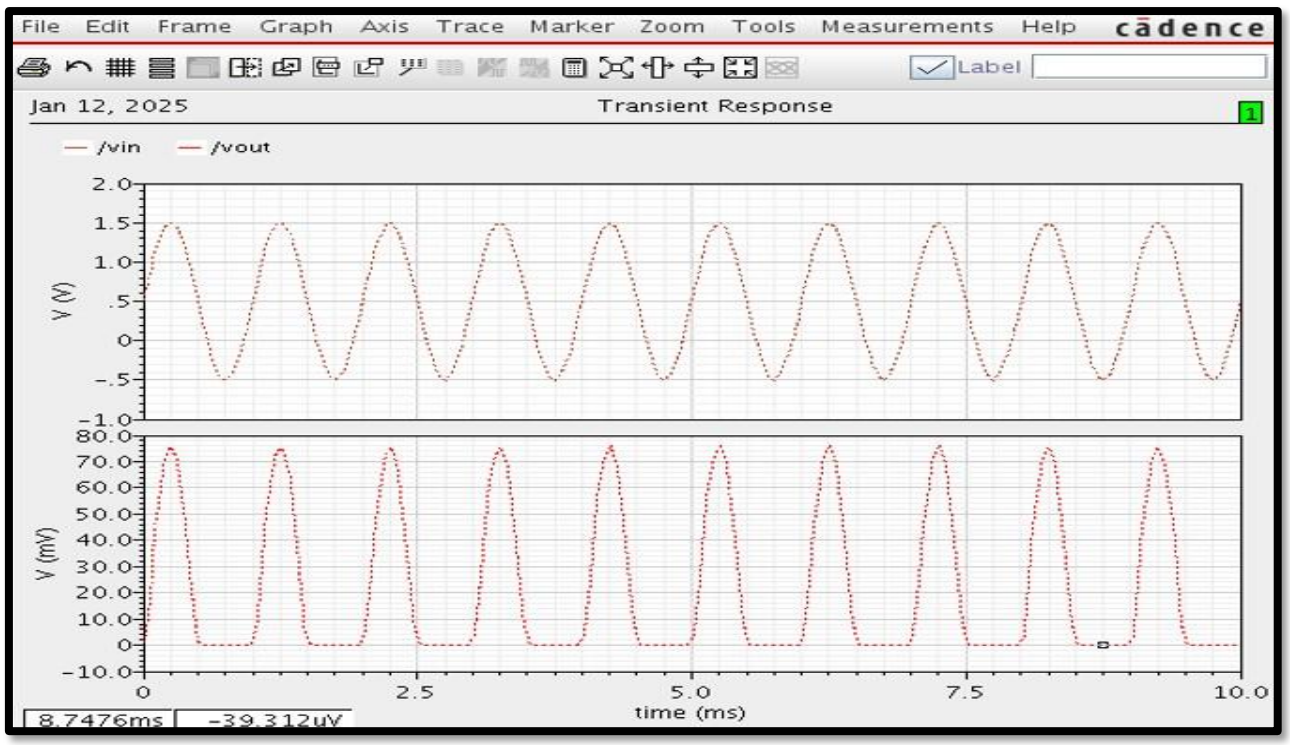

Figure 4.2 Simulation results of Common Drain Amplifier

5. ADVANTAGES AND DISADVANTAGES

5.1 Advantages:-

Common Source Amplifier:

1. High voltage gain.
2. Flexible frequency response.
3. Simple design.

Common Drain Amplifier:

1. Low output impedance.
2. High input impedance.
3. Effective as a buffer.

5.2 Disadvantages:-

Common Source Amplifier:

1. Limited bandwidth.
2. Moderate output impedance.

Common Drain Amplifier:

1. Voltage gain close to unity (not suitable for high amplification).
2. Limited power gain.

6. CONCLUSION

In conclusion, the Common Source (CS) and Common Drain (CD) amplifiers are crucial components in analog circuit design, offering distinct characteristics that make them suitable for various applications.

1. **Common Source (CS) Amplifier:**
    - The CS amplifier is known for its high voltage gain, making it ideal for amplifying weak signals.
    - It provides an inverting output, which can be useful in certain signal processing tasks.
2. **Common Drain (CD) Amplifier:**
    - The CD amplifier, also known as a source follower, provides a low output impedance, making it well-suited for driving loads or as a buffer stage in circuits.
    - It offers voltage gain close to unity (1), but with a high input impedance, it is useful for impedance matching.

Both amplifiers are integral to designing efficient and versatile analog circuits, with the CS amplifier offering high gain and the CD amplifier providing low output impedance and high input impedance for impedance matching. The selection between these two depends on the specific requirements of the application, such as gain, impedance characteristics, and signal processing needs.

The common source amplifier excels in voltage amplification applications, while the common drain amplifier is ideal for buffering and impedance matching. Both configurations play vital roles in analog circuit design and provide distinct performance characteristics that complement each other in various applications.

7. FREQUENTLY ASKED QUESTIONS (FAQs)

Q1: Why is the common source amplifier preferred for voltage amplification?

Answer: The CS amplifier provides high voltage gain due to the transconductance of the MOSFET and the high drain resistance.

Q2: What is the main application of a common drain amplifier?

Answer: The CD amplifier is used as a buffer for impedance matching because of its high input impedance and low output impedance.

Q3: How can bandwidth be improved in a common source amplifier?

Answer: Bandwidth can be improved by reducing the load capacitance and using wider MOSFETs to lower parasitic capacitances.

Q4: How does the Common Source amplifier affect the phase of the input signal?

Answer: The Common Source amplifier inverts the phase of the input signal. This means that if the input signal is positive, the output will be negative, and vice versa, with a phase shift of 180 degrees.

Q5: Why is the Common Drain amplifier often used in impedance matching?

Answer: The CD amplifier is commonly used for impedance matching because it has a high input impedance and low output impedance. This makes it ideal for ensuring maximum power transfer between stages or between a circuit and a load.